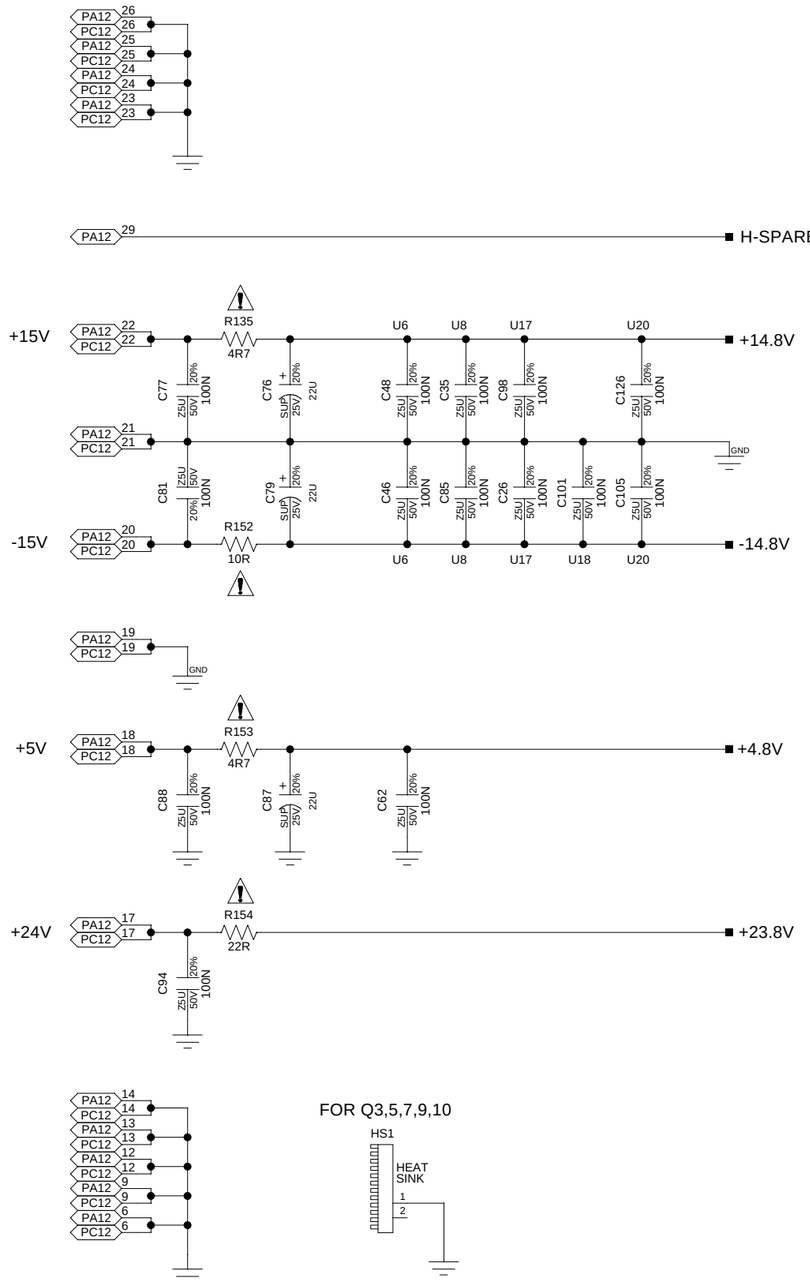

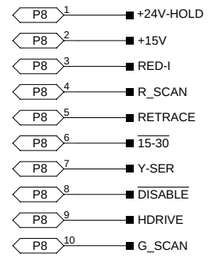

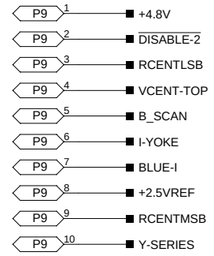

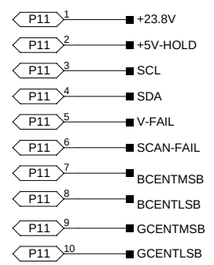

PROJECT: 02-260303-09P	PCB: 50-002003-08P

REVISION HISTORY

ISS	RFC No	DESCRIPTION	DRAWN BY	DATE	APP
1	----------	ORIGINAL	PC	10 DEC 97	MP
2	8-1056-E	R1000 FROM 49K9 TO 47K5 AND	MP	07DEC98	------
2	8-1056-E	R63 FROM 133K TO 100K AND	MP	07DEC98	------
2	8-1056-E	DO NOT POPULATE JUMPER AT P7	MP	07DEC98	

NOTES:

1. UNLESS OTHERWISE SPECIFIED:

   1/8W 5% FOR SURFACE RESISTORS
   1/2W 5% FOR THROUGH RESISTORS
   50V 5% FOR ALL CAPACITORS

2. THE FOLLOWING DENOTE CONNECTOR IDENTITIES:

   MALE FEMALE HARNESS

3. "H" AT COMPONENT DENOTES A HEATSINK.
4. "SKT" DENOTES SOCKETED INTEGRATED CIRCUIT.
5. "SM" IDENTIFIES SURFACE MOUNT PARTS.
6. PCB SENSITIVE TO ELECTROSTATIC DISCHARGE.
7. ARROWS ON SIGNAL LINES INDICATE
   THE DIRECTION OF FLOW.
8. SHIELDED AREAS AS SHOWN.
9. THE FOLLOWING DENOTE GROUND IDENTITIES:

   DIGITAL ANALOG CHASSIS

10. "DNP" IDENTIFIES THE FOLLOWING PARTS
    THAT ARE NOT TO BE POPULATED:

HIGHEST	REFERENCE DESIGNATORS	NOT USED

CAUTION

FOR CONTINUED SAFETY, REPLACE ALL COMPONENTS
NOTED BY ⚠ WITH EXACT REPLACEMENT PARTS ONLY!
CONSULT SERVICE MANUAL FOR REPLACEMENT TYPE!

ELECTROHOME PROJECTION SYSTEMS © COPYRIGHT D

KITCHENER, ONT.
CANADA N2G 4J6
(519) 744-7111

TITLE: HORIZONTAL DEFLECTION MODULE (HDM)

DATE & TIME

SCHEMATIC: 00-260303-09P ISS 2

SHT 1 OF 4

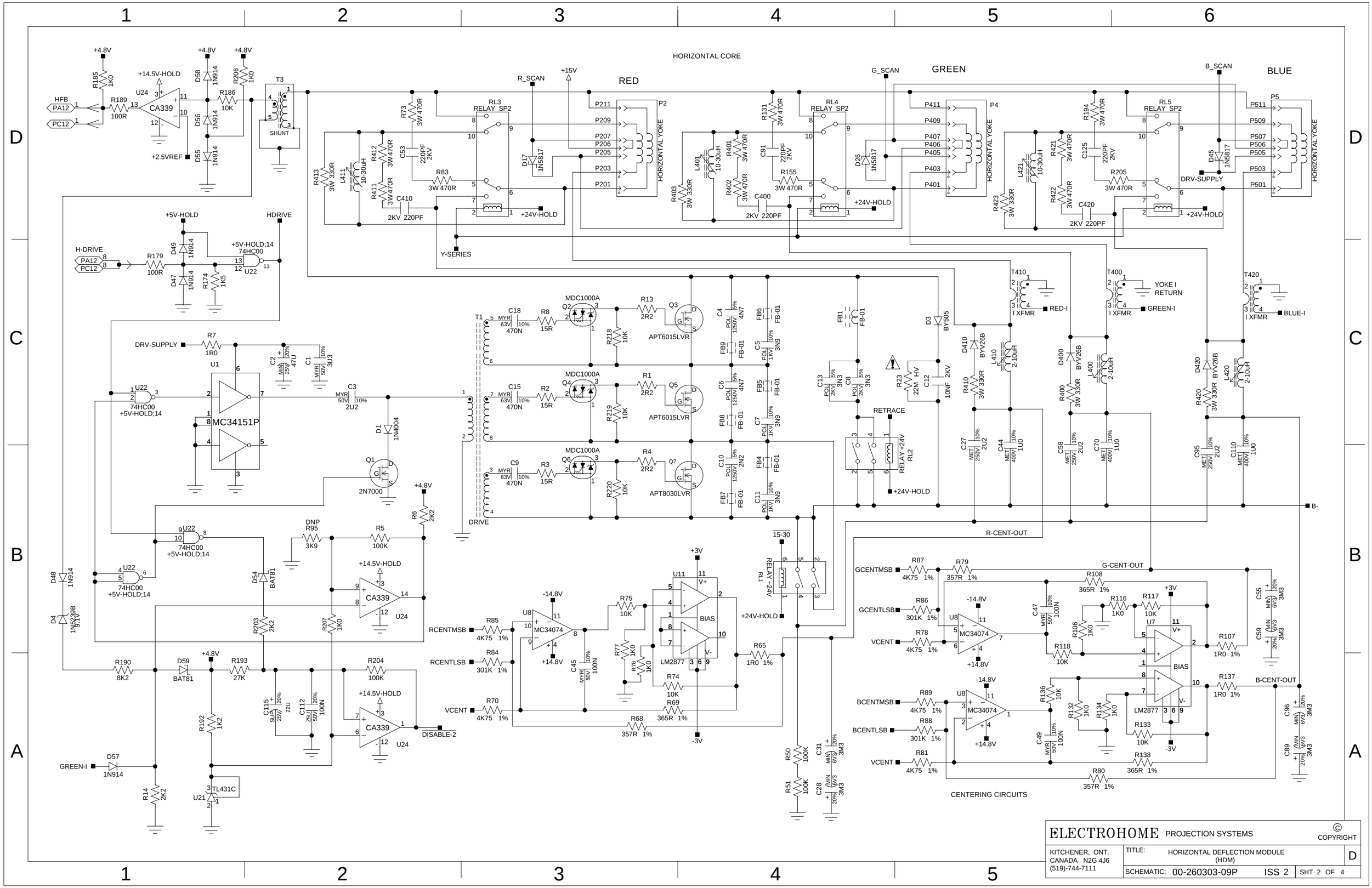

ELECTROHOME PROJECTION SYSTEMS

© COPYRIGHT

KITCHENER, ONT.
CANADA N2G 4J6
(519)-744-7111

TITLE: HORIZONTAL DEFLECTION MODULE (HDM)

D

SCHEMATIC: 00-260303-09P ISS 2 SHT 2 OF 4

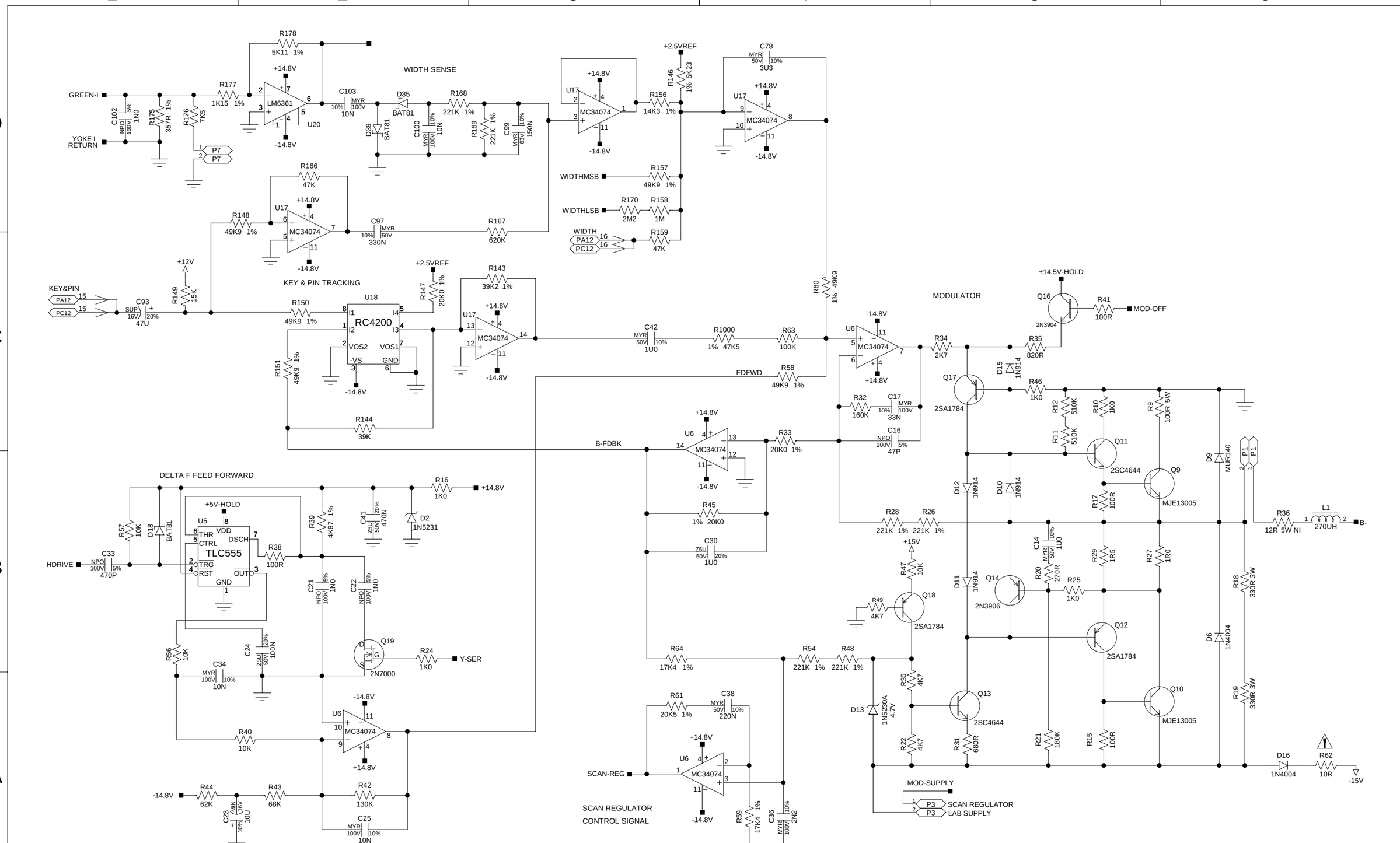

ELECTROHOME PROJECTION SYSTEMS

© COPYRIGHT

KITCHENER, ONT.
CANADA N2G 4J6
(519)-744-7111

TITLE: HORIZONTAL DEFLECTION MODULE (HDM)

SCHEMATIC: 00-260303-09P ISS 2 SHT 3 OF 4

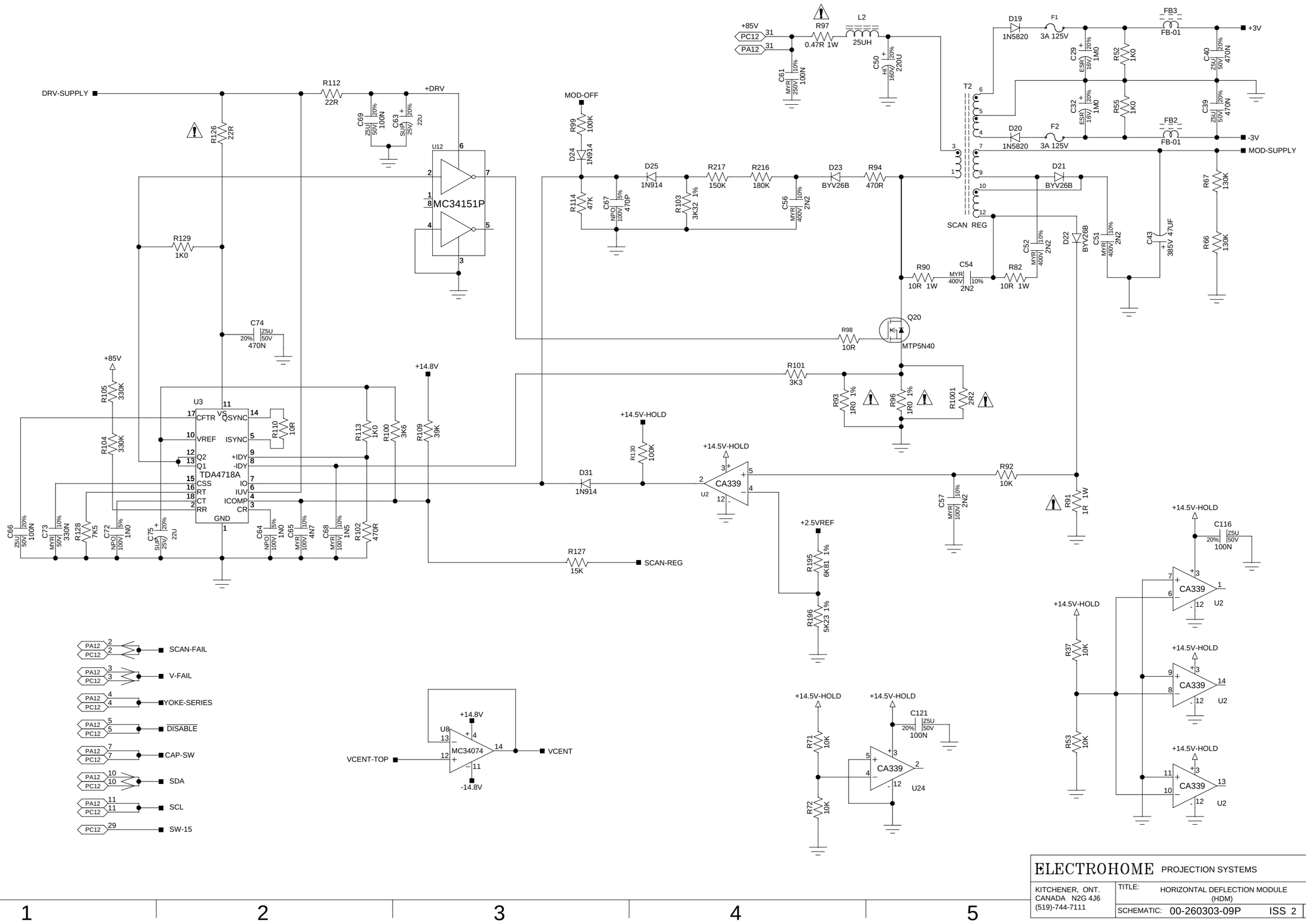

ELECTROHOME	PROJECTION SYSTEMS
KITCHENER, ONT. CANADA N2G 4J6 (519)-744-7111	TITLE: HORIZONTAL DEFLECTION MODULE (HDM)
SCHEMATIC: 00-260303-09P	ISS 2
SHT 4 OF 4	D

© COPYRIGHT