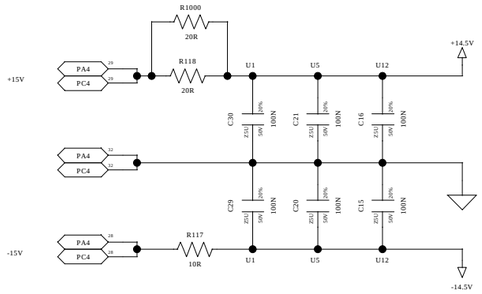

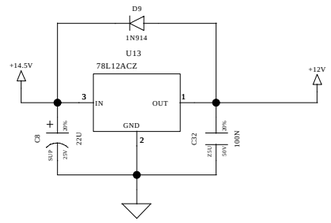

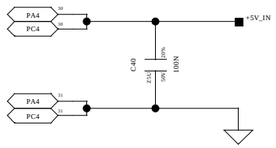

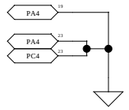

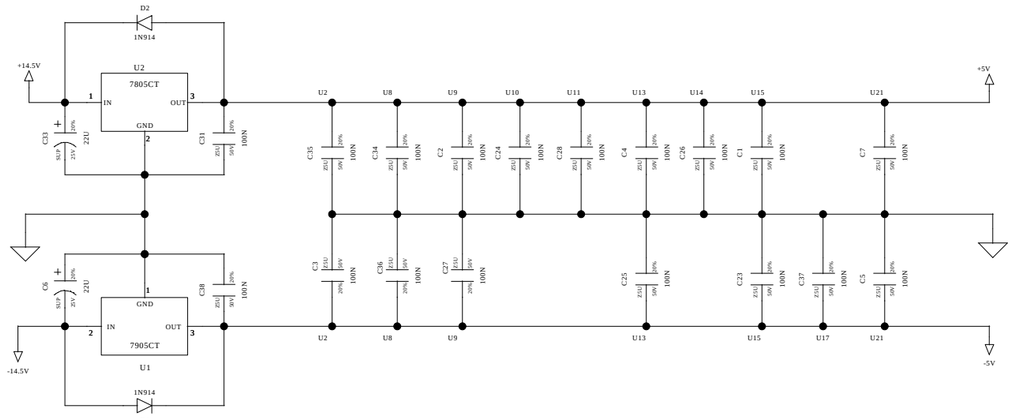

IMPLICIT CHART

REFDES	SYMBOL	VDD	GND	AN	GND
J2	BNC			3	4
J3	BNC			3	4
J4	BNC			3	4
J5	cojrsvhs2			7	
J6	cojrsvhs2			7	
J7	BNC			3	4
J8	BNC			3	4
J9	RCA			3	
J10	RCA			3	
J11	RCA			3	
J12	RCA			3	
J13	RCA			3	
J14	RCA			3	
J15	RCA			3	
J16	RCA			3	
SW1	SPDT			4	
SW2	DPDT			7	
U3	74VHC32	14	7		
U13	74VHC08	14	7		
U29	LT1260CS			3	6
U35	74VHC240	20	10		
U38	LT1260CS			3	6
U39	74HC4538	16	8		
U40	74HC4538	16	8		

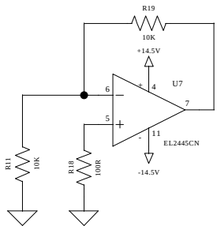

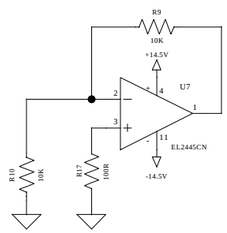

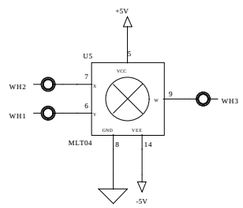

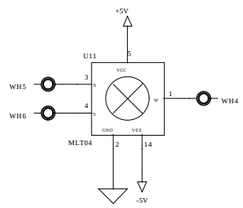

ADDITIONAL BILL ITEMS

PART NUMBER	QTY	DESCRIPTION
00-150337-01P	0	PERFORMANCE SPEC
00-260337-01P	0	SCHEMATIC
33-000687-01P	2	RIV SCREW
33-000548-01P	1	BOARD EXTRACTOR
50-002037-01P	1	P.C.B.
54-018995-01P	1	LABEL
56-260337-01P	1	L.O.M.
98-000170-01P	1	BAG POLY CONDUCTIVE

PROJECT:	02-260337-01P	PCB:	50-002037-01P

REVISION HISTORY

ISS	RFC No	DESCRIPTION		DATE	APP
01	-----	ORIGINAL	TP	13APR95	KR
02	50246	RES REVALUED	TP	16MAY95	KR
03	50261	RES & CAP REVALUED	TP	13FEB96	MP
04	50357	RES REVALUED	TP	13FEB96	MP
05	60061	C1000 & C1001 ADDED	TP	13FEB96	MP
06	60388	D1000 & D1001 ADDED	TP	19SEP96	
07					
08					
09					
10					

NOTES:

1. UNLESS OTHERWISE SPECIFIED:
   1/8W 5% FOR SURFACE RESISTORS
   1/2W 5% FOR THROUGH RESISTORS
   50V 5% FOR ALL CAPACITORS

2. THE FOLLOWING DENOTE CONNECTOR IDENTITIES:
   MALE FEMALE HARNESS

3. "H" AT COMPONENT DENOTES A HEATSINK.

4. "SKT" DENOTES SOCKETED INTEGRATED CIRCUIT.

5. "SM" IDENTIFIES SURFACE MOUNT PARTS.

6. PCB SENSITIVE TO ELECTROSTATIC DISCHARGE.

7. ARROWS ON SIGNAL LINES INDICATE
   THE DIRECTION OF FLOW.

8. SHIELDED AREAS AS SHOWN.

9. THE FOLLOWING DENOTE GROUND IDENTITIES:
   DIGITAL ANALOGUE CHASSIS

10. "DNP" IDENTIFIES THE FOLLOWING PARTS
    THAT ARE NOT TO BE POPULATED:
    R84 R90 R95 R96

HIGHEST	REFERENCE DESIGNATORS			NOT USED			
C40	D23	PA4	PC4				
P1	Q2	R120	RN3				
U18	WH7						

CAUTION

FOR CONTINUED SAFETY, REPLACE ALL COMPONENTS
NOTED BY ⚠ WITH EXACT REPLACEMENT PARTS ONLY!
CONSULT SERVICE MANUAL FOR REPLACEMENT TYPE!

ELECTROHOME PROJECTION SYSTEMS COPYRIGHT

KITCHENER ONT
CANADA N2G 4J6
(519)-744-7111

TITLE: CONTRAST MODULATION MODULE (CMM)

SCHEMATIC: 00-260337-01P ISS 6 SHT OF 1 4

D

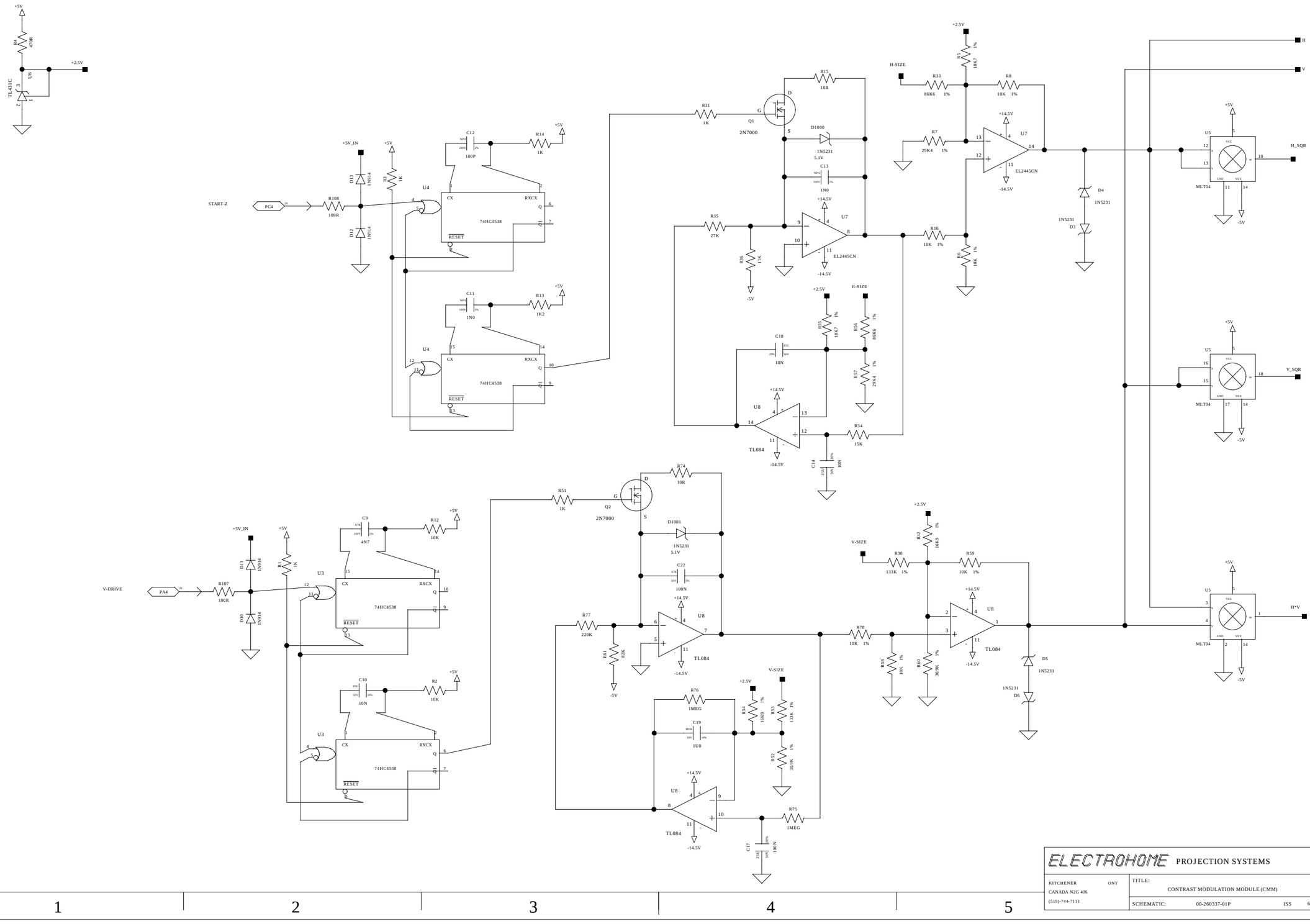

ELECTROHOME PROJECTION SYSTEMS

COPYRIGHT

KITCHENER ONT
CANADA N2G 4J6
(519)-744-7111

TITLE: CONTRAST MODULATION MODULE (CMM)

D

SCHEMATIC: 00-260337-01P ISS 6 SHT OF 2 4

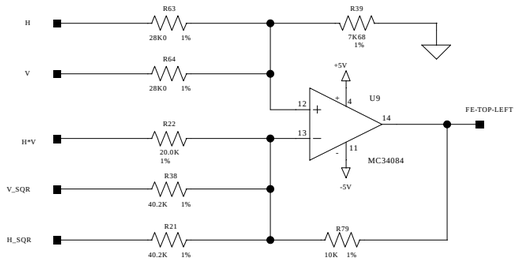

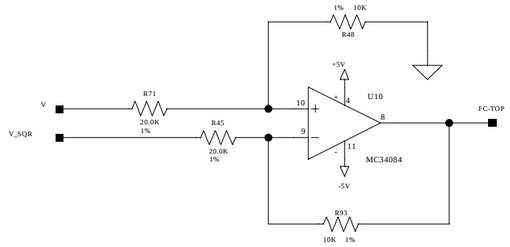

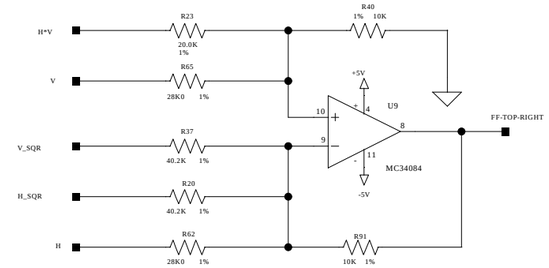

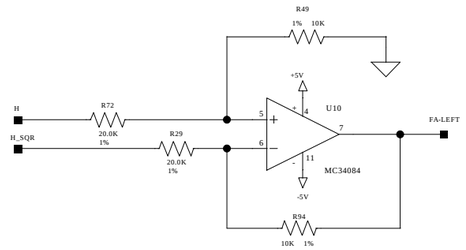

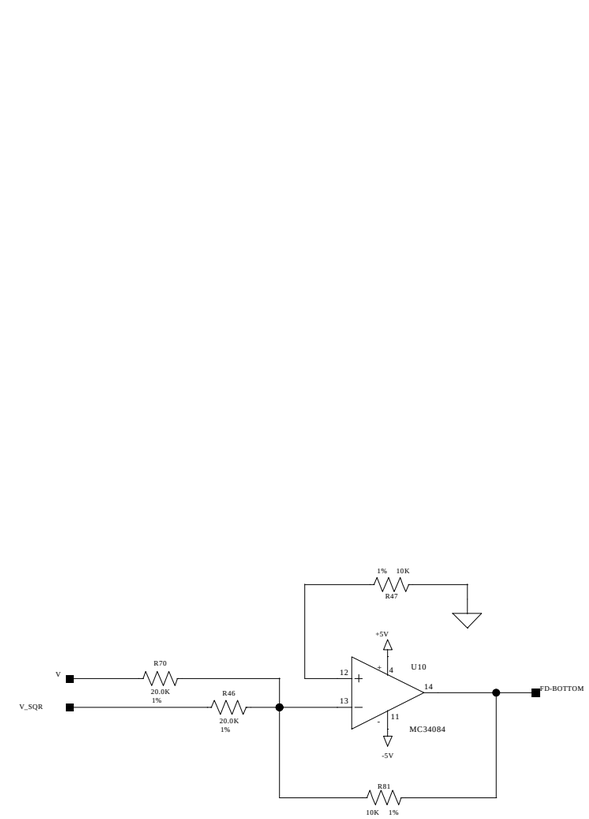

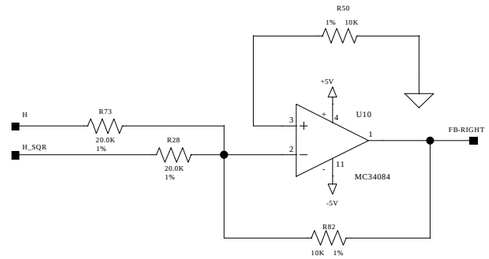

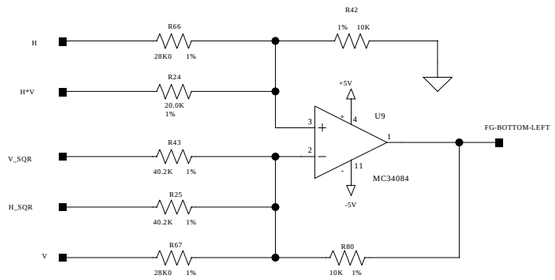

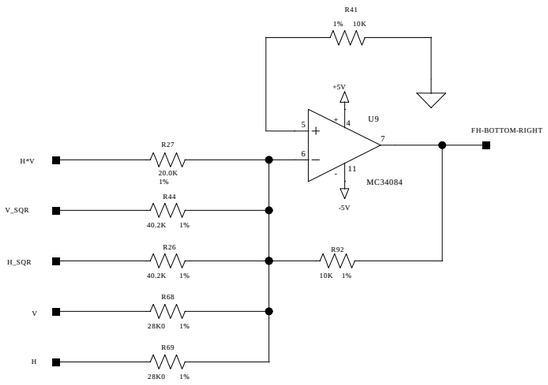

ELECTROHOME PROJECTION SYSTEMS

COPYRIGHT

KITCHENER ONT
CANADA N2G 4J6
(519)-744-7111

TITLE:
CONTRAST MODULATION MODULE (CMM)

D

SCHEMATIC: 00-260337-01P ISS 6 SHT OF 3 4

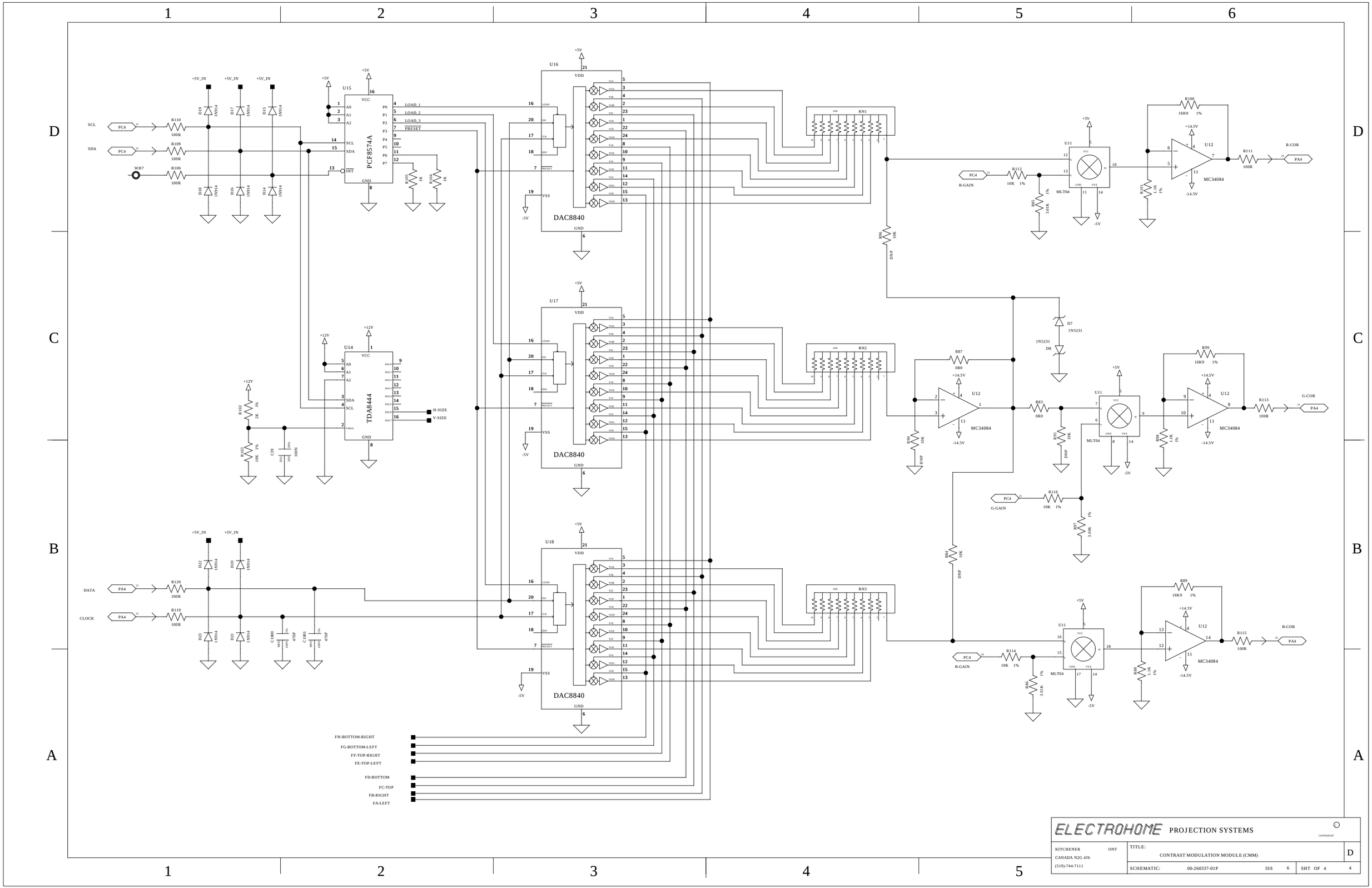

SCL
SDA
WH7
PC4
R110 100R
R109 100R
R106 100R
+5V_IN
D19 1N914
D17 1N914
D15 1N914
D18 1N914
D16 1N914
D14 1N914
U15
PCF8574A
VCC
GND
LOAD_1
LOAD_2
LOAD_3
PRESET
R105 1K
R104 1K
U16
DAC8840
U17
DAC8840
U18
DAC8840
VDD
VSS
GND
+5V
-5V
U14
TDA8444
+12V
H-SIZE
V-SIZE
R102 2K 1%
R103 10K 1%
C39 100N
DATA
CLOCK
PA4
R120 100R
R119 100R
D22 1N914
D20 1N914
D23 1N914
D21 1N914
C1000 470P
C1001 470P
RN1
RN2
RN3
R96 10K DNP
R87 0R0
R90 10K DNP
R83 0R0
R95 10K DNP
R84 10K DNP
D7 1N5231
D8 1N5231
U11
MLT04
U12
MC34084
R100 16K9 1%
R111 100R
R-COR
R-GAIN
R112 10K 1%
R85 3.01K 1%
R101 1.1K 1%
R99 16K9 1%
R113 100R
G-COR
G-GAIN
R116 10K 1%
R97 3.01K 1%
R98 1.1K 1%
R89 16K9 1%
R115 100R
B-COR
B-GAIN
R114 10K 1%
R86 3.01K 1%
R88 1.1K 1%
FH-BOTTOM-RIGHT
FG-BOTTOM-LEFT
FF-TOP-RIGHT
FE-TOP-LEFT
FD-BOTTOM
FC-TOP
FB-RIGHT
FA-LEFT
ELECTROHOME PROJECTION SYSTEMS
COPYRIGHT
KITCHENER ONT
CANADA N2G 4J6
(519)-744-7111
TITLE:
CONTRAST MODULATION MODULE (CMM)
D
SCHEMATIC: 00-260337-01P ISS 6 SHT OF 4 4