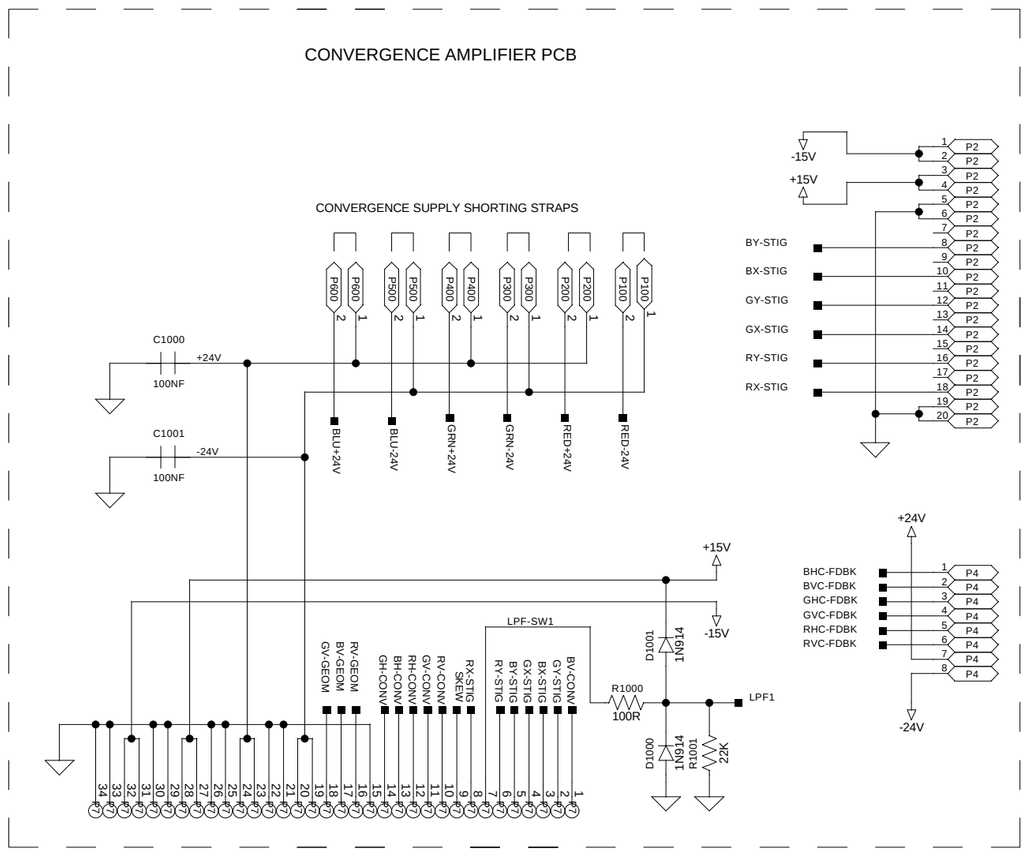

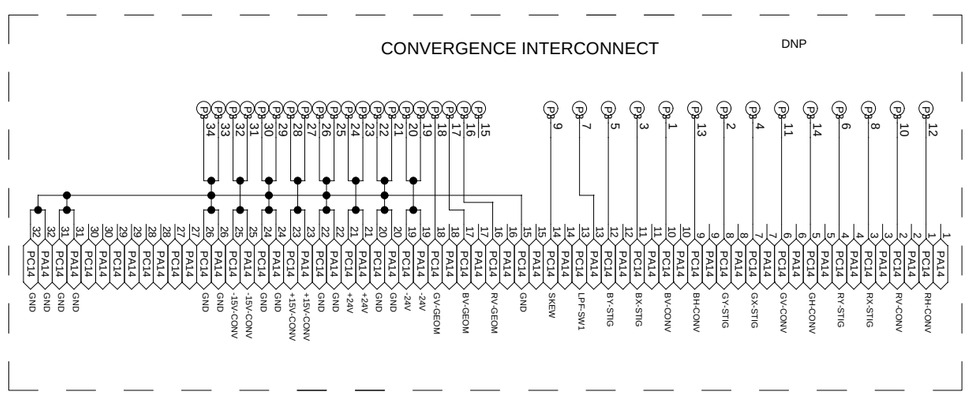

PROJECT:	02-262350-01P	MARQUEE	PCB:	50-002230-01P

REVISION HISTORY

ISS	RFC No	DESCRIPTION		DATE	APP
01	-----	ORIGINAL	TP	16DEC96	MP
02	70016	R121,R221 ETC REVALUED	TP	26FEB97	
03					
04					
05					
06					
07					
08					
09					
10					

NOTES:

1. UNLESS OTHERWISE SPECIFIED:
   1/8W 5% FOR SURFACE RESISTORS
   1/2W 5% FOR THROUGH RESISTORS
   50V 5% FOR ALL CAPACITORS

2. THE FOLLOWING DENOTE CONNECTOR IDENTITIES:
   MALE FEMALE HARNESS

3. "H" AT COMPONENT DENOTES A HEATSINK.
4. "SKT" DENOTES SOCKETED INTEGRATED CIRCUIT.
5. "SM" IDENTIFIES SURFACE MOUNT PARTS.

6. PCB SENSITIVE TO ELECTROSTATIC DISCHARGE.

7. ARROWS ON SIGNAL LINES INDICATE THE DIRECTION OF FLOW.
8. SHIELDED AREAS AS SHOWN.

9. THE FOLLOWING DENOTE GROUND IDENTITIES:
   DIGITAL ANALOGUE CHASSIS

10. "DNP" IDENTIFIES THE FOLLOWING PARTS THAT ARE NOT TO BE POPULATED:
    P3 P14

HIGHEST	REFERENCE DESIGNATORS	NOT USED

CAUTION

FOR CONTINUED SAFETY, REPLACE ALL COMPONENTS NOTED BY ⚠ WITH EXACT REPLACEMENT PARTS ONLY!
CONSULT SERVICE MANUAL FOR REPLACEMENT TYPE!

ELECTROHOME PROJECTION SYSTEMS

© COPYRIGHT

KITCHENER ONT
CANADA N2G 4J6
(519)-744-7111

TITLE: CONVERGENCE AMPLIFIER MODULE

D

SCHEMATIC: 00-262350-01P ISS 2 SHT OF 4

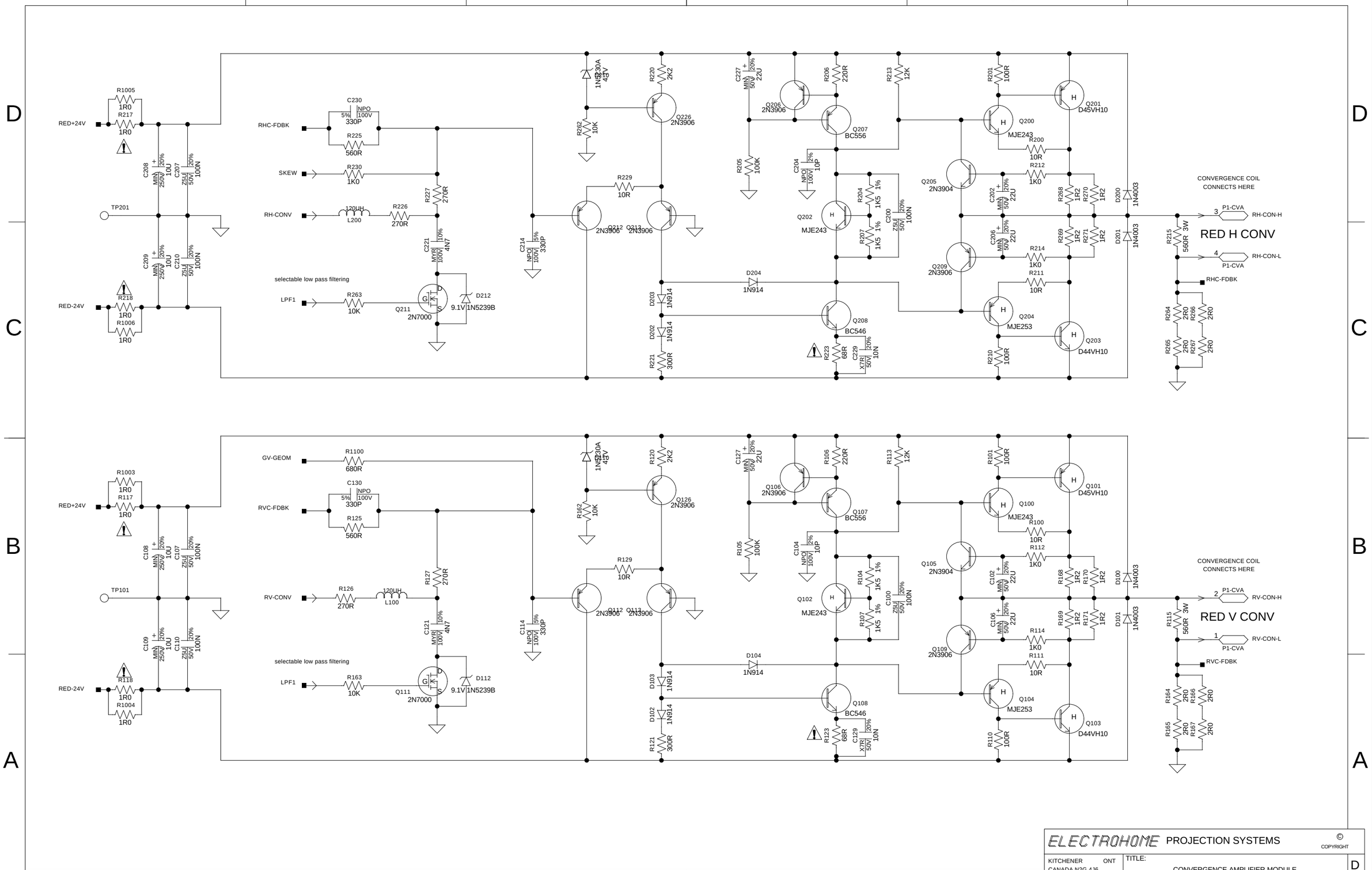

ELECTROHOME PROJECTION SYSTEMS

© COPYRIGHT

KITCHENER ONT
CANADA N2G 4J6
(519)-744-7111

TITLE: CONVERGENCE AMPLIFIER MODULE

D

SCHEMATIC: 00-262350-01P ISS 2 SHT 2 OF 4

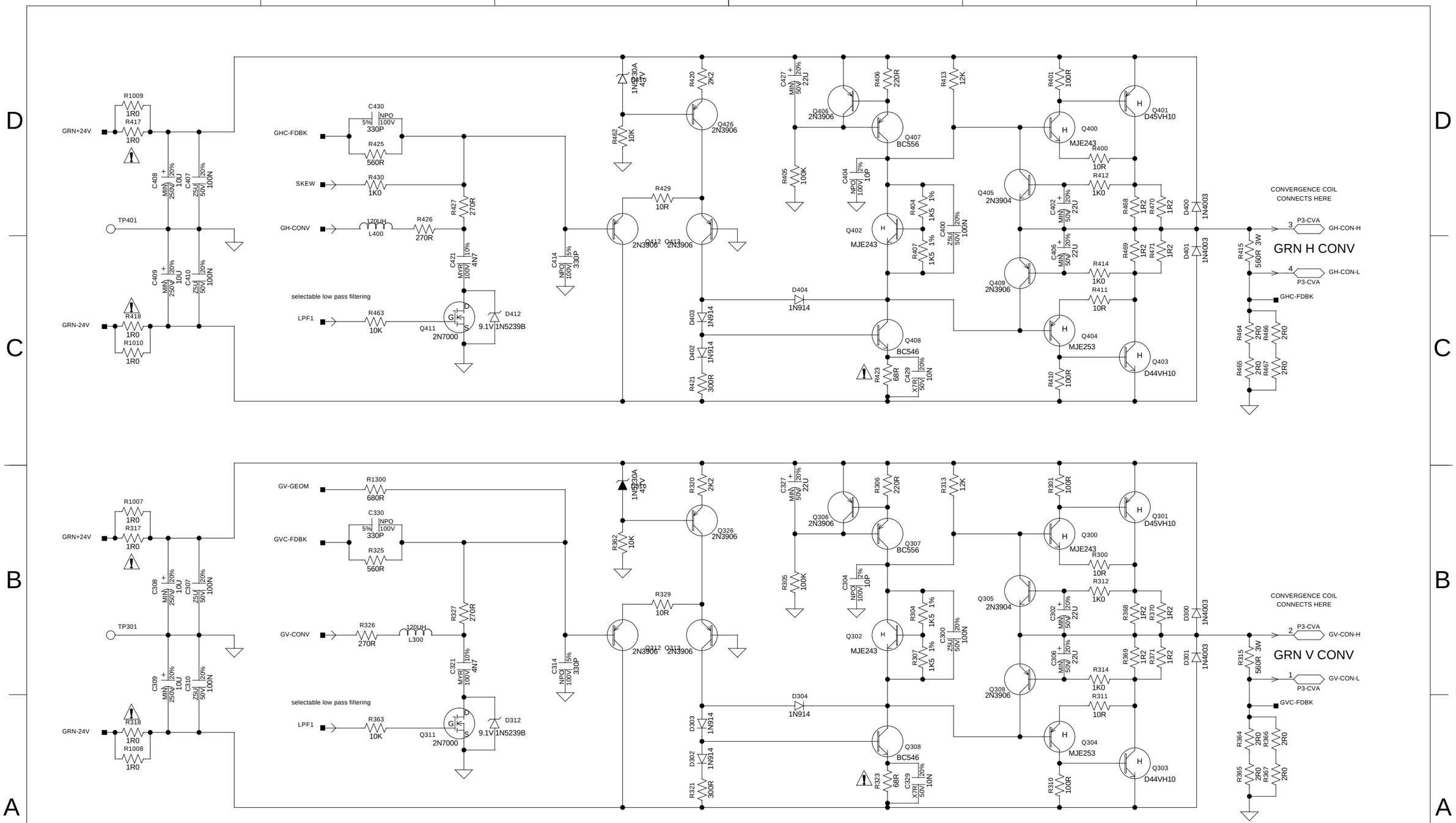

ELECTROHOME PROJECTION SYSTEMS

© COPYRIGHT

KITCHENER ONT
CANADA N2G 4J6
(519)-744-7111

TITLE: CONVERGENCE AMPLIFIER MODULE

D

SCHEMATIC: 00-262350-01P ISS 2 SHT 3 OF 4

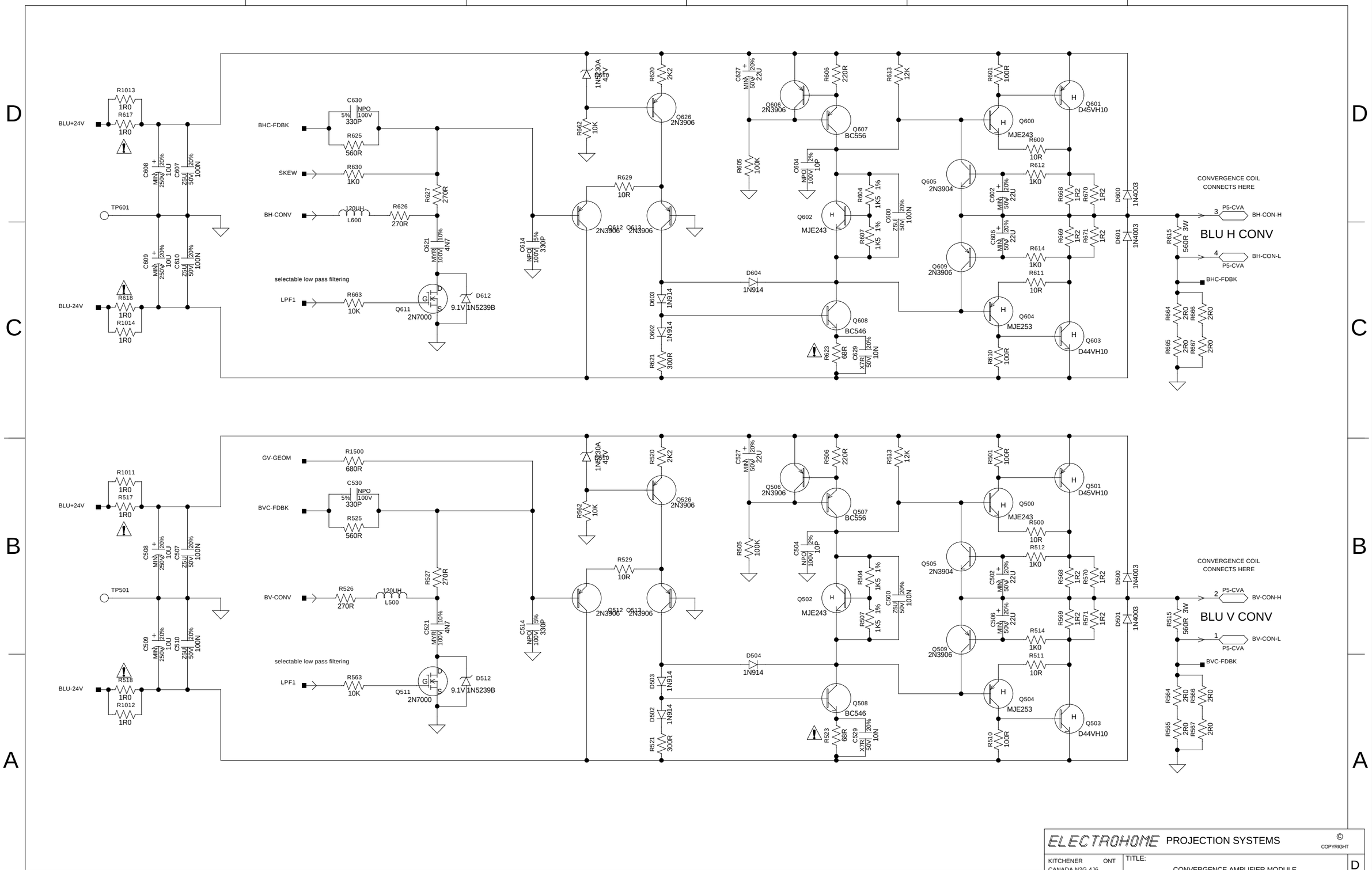

ELECTROHOME PROJECTION SYSTEMS

© COPYRIGHT

KITCHENER ONT
CANADA N2G 4J6
(519)-744-7111

TITLE: CONVERGENCE AMPLIFIER MODULE

D

SCHEMATIC: 00-262350-01P ISS 2 SHT 4 OF 4